Innometrics
Trusted RFID Cards & Tags Supplier
boby@innometricstech.com
www.innometricstech.com
+0086-15976891693

ABS ON-METAL TAG



Model:INNO-MTTAG-ABS8824

Profile

This tag is made of ABS material,
developed with customized UHF antenna,
good performance with metal surface installation.
Widely used widely used in indoor and outdoor asset management and inspection management and logistics tracking management

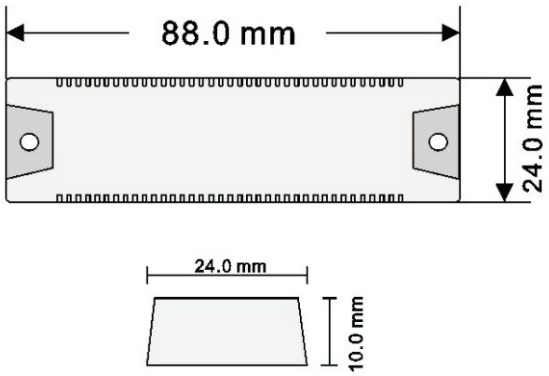

Key Features:

- Rugged tag for harsh environment
- Multiple installation method available
- High sensitivity for both reading and writing
- Easy and Reliable performance on-metal installation
- External number for easy identification and access control

Specification:

Tag Type:	On-Metal UHF Tag
Material:	ABS
Color:	Black, Yellow (customized available)
Dimensions:	88*24mm
Thickness:	10mm
Chips:	Alien H3/H9, NXP U8/U9, Impinj M730, etc
Protocol:	EPC Class1 Gen2, ISO18000-6C
Operating Frequency:	860-960Mhz
Read Range (Fix Reader):	1~15m on metal (may change based different readers and environment)

Data storage:	up to 10 years
Re-write:	100,000 times
Warranty:	1 year
Operating Temp:	-30°C to +85°C
Attachment Method:	Adhesive and screw
Weight:	16g